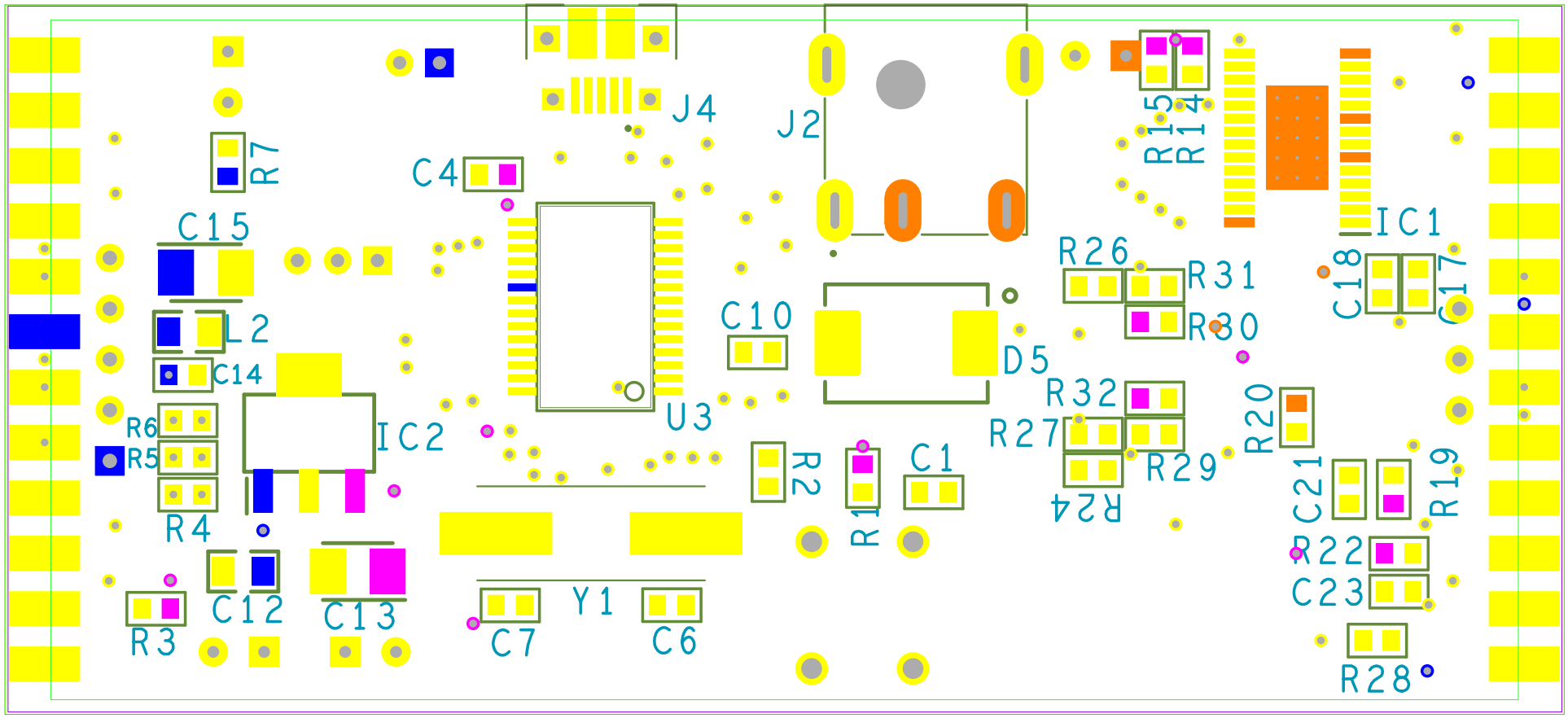
J4
J2
R15
R14
R7
C4
C15
IC1
R26
R31
C18
C17
L2
C10
R30
C14
D5
R32
R6
IC2
U3
R20
R5
R27
R29
R2
C1
C21
R19
R4
R1
R24
R22
C12
C13
Y1
C23
R3
C7
C6
R28